Building Information Modeling

Ceiling Trims - PS3 Plaster Trim Internal Corner

Keynote Legend	
Key Value	Keynote Text
C2.3	Supply and install 3600mm JUMBO Main Tees at 1200mm centres in one direction and 1200mm JUMBO Cross Tees at 600mm centres perpendicular to Main Tees. Main Tees to be suspended at 1200mm centres by means of 25 x 25 x 0.6mm galvanised steel angle, hangers fixed to bulb of Main Tee with Wafer Tek screws/steel Pop Rivets and to slab with 6 x 30mm Express Nails and Washers.
TR04-A	PS3 Plaster Trim Internal Corner 45 x 20. Supply and install Pelican PS3 Plaster Trim Internal Corner pre-drilled & pre-painted aluminium white Shadowline Wall Trim to perimeter of rooms fixed at 50mm from end.

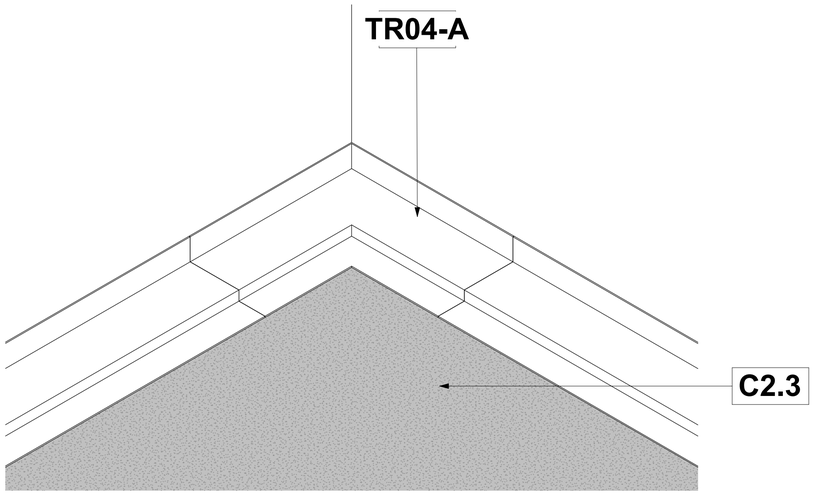

TR04-A - PS3 Plaster Trim Internal Corner 3D

Scale

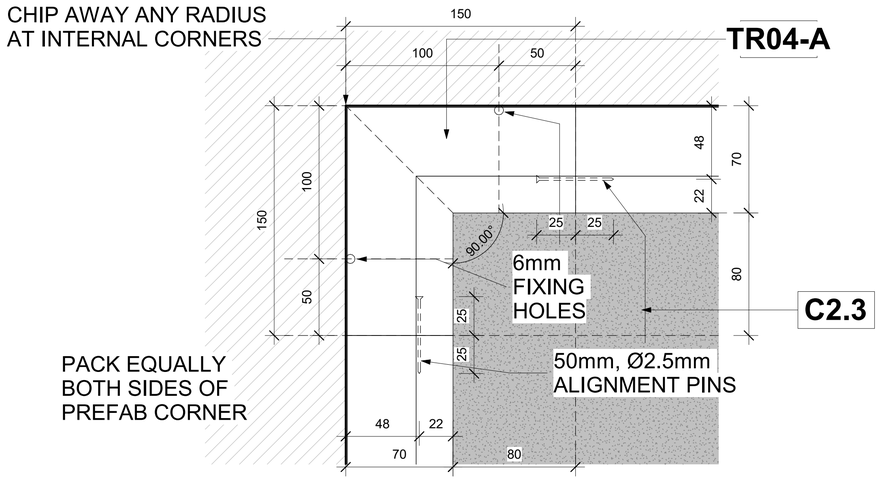

TR04-A - PS3 Plaster Trim Internal Corner

Scale 1 : 2

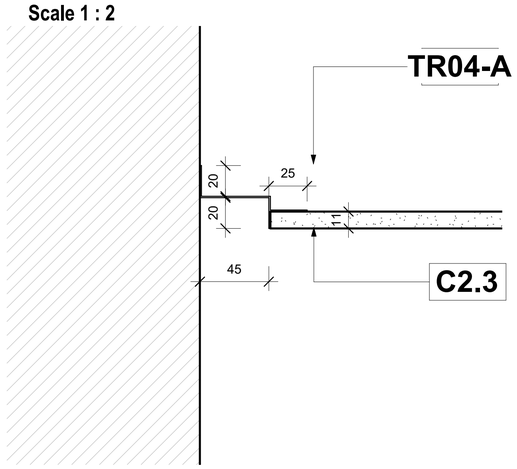

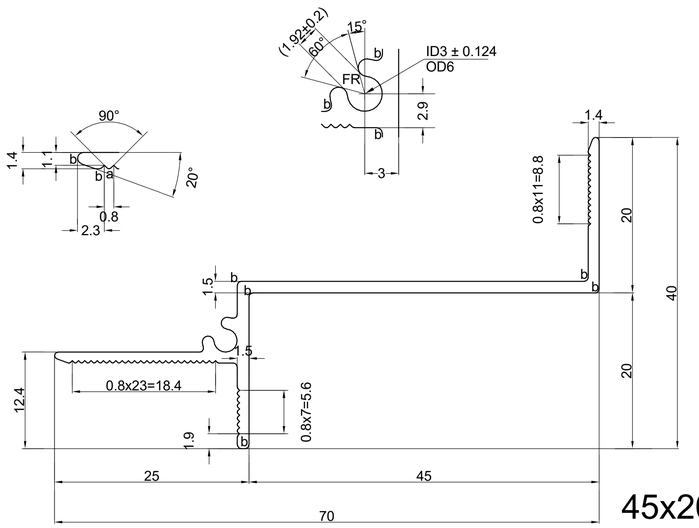

45x20 ; 150x150

TR04-A - PS3 Plaster Trim Internal Corner	
System	Ceiling Trims
Type of Product	PS3 Plaster Trim Internal Corner 45mm x 20mm
Recommended Areas	Ceiling Corner
Technical Spec	TBD
Material	Aluminium 6063-T5
Picture	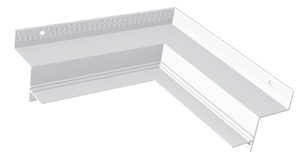
Size and Thickness	45mm x 20mm; 150mm x 150mm
Colour Options	Matt Traffic White - ANP39016
Building material information	N/A
Fire Protection	N/A
Sound absorption	N/A
Sound attenuation	N/A
Sound insulation	N/A
Light reflectance	N/A
Thermal conductivity	N/A
Air permeability	N/A
Humidity	N/A
Green Rating	N/A
Specifications	PS3 Plaster Trim Internal Corner 45 x 20. Supply and install Pelican PS3 Plaster Trim Internal Corner pre-drilled & pre-painted aluminium white Shadowline Wall Trim to perimeter of rooms fixed at 50mm from end.
Notes	• Pre-drilled 50mm from End.

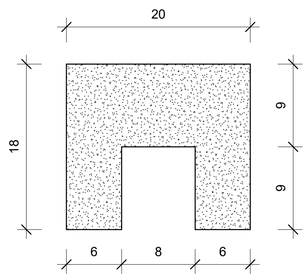

PVC Shim 1mm
NTS

pelican systems
ceiling and partitioning specialists...
Head Office / Durban Branch | 765 / 793 Chris Hani Road, Durban, Redhill | 031 563 7307
Find us online at **www.pelican.co.za** or any of these social media sites